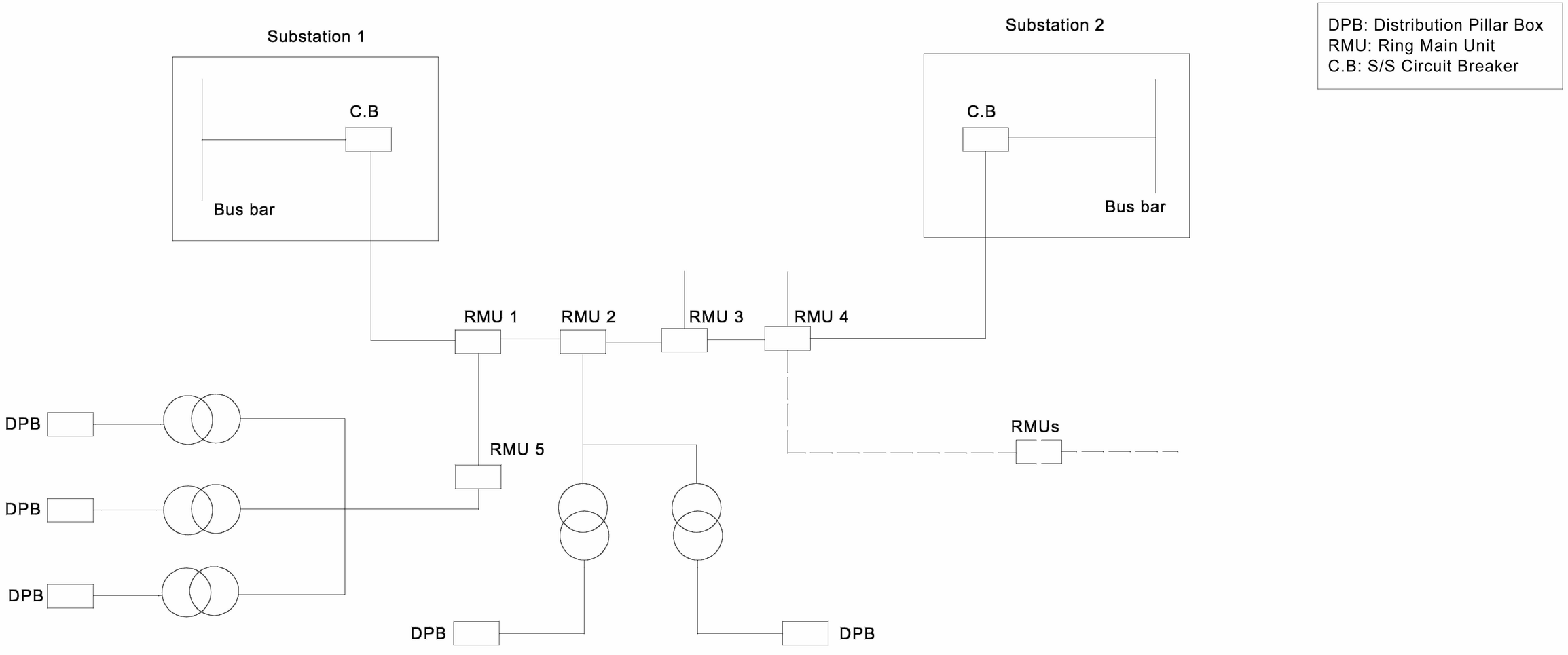

Nepal Electricity Authority **Project Management Directorate** Enhancement of Distribution Network in East And South Region of Kathmandu Valley	**Schematic Drawing for Ring Main System**	**Tender Nubmer:** PMD/PTDEEP/KVESDSEP-074/75-01	**Drawing Nubmer:** KVMDC/2